BST 电科电源

Versatile Energy Storage Battery

- ★ Home Energy Storage System
- ★ Balcony Solar Battery System
- ★ Portable Power Station

PT-SG

Flexible Expansion

Can support 6 units in parallel
Total capacity up to 15kWh/22kWh

Expandable

Can be merged into
three-phase

AC Coupled ESS

AC coupling input bypasses
PV system remodifying costs

IP65 Protection

IP65 waterproof rating
can be placed on the balcony

BST Cloud

Support the establishment,
data collection, monitoring,
operation, maintenance

OEM/ODM

Appearance and display
can be customised

AC-Coupled Home Energy Storage

www.bstess.com

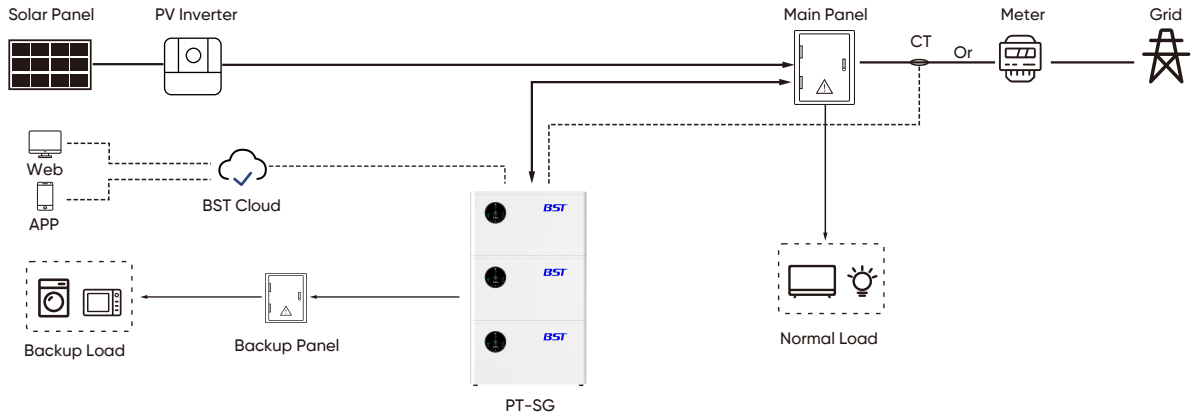

Model		PT-SG-HB2.5	PT-SG-HB3.6
PV (Input)	MPPT Amount	2	
	PV Input Range	10V~100V	
	MPPT Voltage Range	10V~90V	
	MPPT Max.Input Current	16A/16A	
	Max. MPPT Power	800W+800W	
	Max.PV Input Power	1000W+1000W	
Grid (Output)	Grid System	Single Phase	
	Rated Voltage	220V/230V	
	Rated Grid Frequency	50Hz/60Hz	
	Rated Grid Output Power	0.8kW/1.6kW	1.6kW/2.4kW
	Max.Grid Input Current	16A	
	Max.Grid Input Power	3.2kW	
	Power Factor Range	0.9 Leading~0.9 Lagging	
	THDI	<3%	
Battery Data	Battery Energy	2.56kWh	3.68kWh
	Battery Type	LFP	
	Max.Charge/Discharge Current	50A/50A	
	Cycle Life	6000 times(80% DOD)	
	Designed Life	15 Years	
Backup （Output）	Rated Output Voltage	230V	
	Rated Output Frequency	50Hz/60Hz	
	Output Waveform	Pure Sine Wave	
	Rated Output Power	0.8kW/1.6kW	1.6kW/2.4kW
	Max.Peak Output Power	3200VA(5s)	
	Transfer Time	10 ms	
	Parallel Expansion	Support up to 6 Products of the same model in Parallel	
General Parameter	Dimension(W*H*D)	540*375*307mm	
	Weight	~39.8kg	~44kg
	Ingree Protection Degree	IP65	
	Operation Altitude	≤3000m	
	Heat Dissipation	Air Cooling	
	Noise Emission	<30dB	
	Install	Indoor/Outdoor	
Certification	Safety	CE-EMC+RED,IEC62619,IEC62109	
	Grid	VDE4105,VDE0124,EN50549,G98/G100,RD413,RD647,UNE217002,C10/11	
	Transportation	UN38.3	

BST Power (Shenzhen) Limited

701,Building A,No.4 Plant Baolong Inteligent Manufacturing Park,No.32 BaotongRoad Baolong Community, Baolong Street, LonggangDistrict, Shenzhen,Guangdong, China

0755-84260300

pt.sales@bstbattery.com